RIVERLAND AMATEUR RADIO CLUB MAY 2013

THE KEY

The Riverland Amateur Radio Club is a Special Service Club affiliated with the American Radio Relay League

Repeater
146.970 PL 131.8

• • • • •

RARC Net
The club's weekly net is 8 p.m. Sundays on the 146.970 repeater.

• • • • •

Club meetings
Club meetings are 7 p.m., the first Tuesday of the month at Gundersen/Lu theran in La Crosse. They will be in meeting room 1 on the lower level of the clinic.

"**Meeting of Elmers**," advice, discussion and help is at 6 p.m. in the confer ence room in the Gundersen Clinic.

Visit the RARC Web page at *http://rarc.qth.com/* to find information about the club and links to other Ham related sites.

Inside

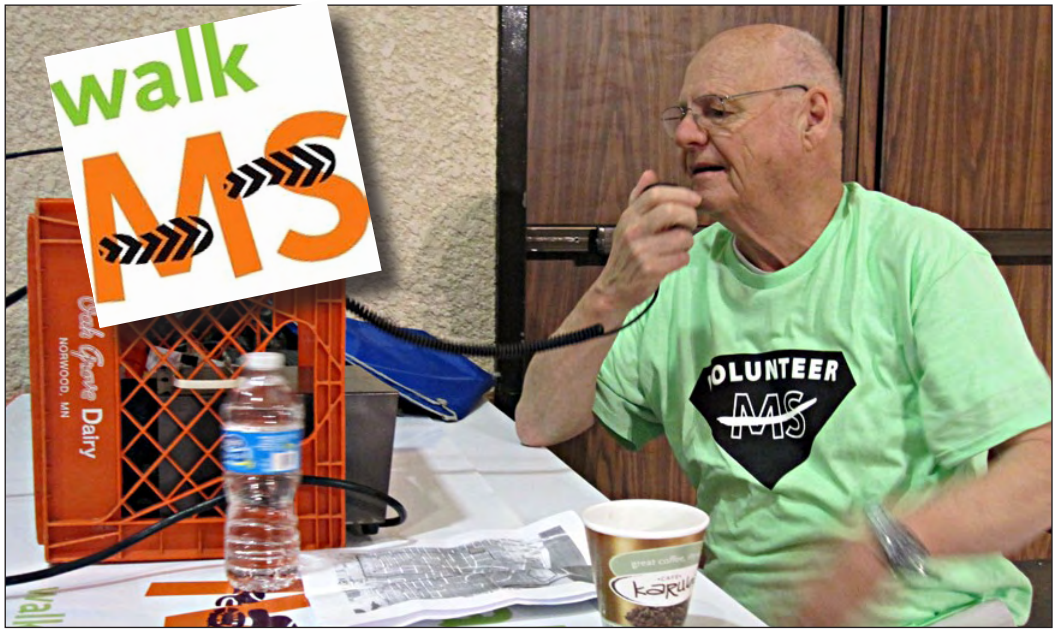

Net Control for the MS Walk communications Saturday, April 27, was Tom O'Brien, WB9BJQ. The Riverland Club has provided this service for many years. The club's participation also is a qualifier for the ARRL Special Service Club designation. Club members participating included Dan Abts, AB9TS, Greg Miller, KA9FOZ, Roger Reader, KA9BKK, Bob Seaquist, KC9IWE, Carl Thurston, KC9HDS and Bob Wilson, N9LZK.

Worked All Club Members event begins

Club members may have worked all states, worked all counties, worked all continents or more and now they have a new hill to climb, the Worked All Club Members WACM award.

The WACM runs from the club meeting Tuesday, May 7, through the end of November.

To qualify, members must meet all club members either on the air or in an eyeball QSO during that time and submit the official log (page #) by Nov. 30. Logs are due at the December meeting and awards will be presented at the club's holiday party.

Event co chairs Larry Worthington, KC9HDP and Dave Peters, KB9EWG, suggest using the club's 146.97 PL 131.8 repeater as one means of meeting other members. There will be opportunities during the club's Sunday Night Net. They also recommend eyeball QSOs.

Code Proficiency qualifying run May 7

Did you know that the ARRL offers a Code Profi ciency Certificate?

Copy some text at gradually increasing speeds to get a series of endorsement stickers to the basic award. They go as high as 40 wpm! The next W1AW Qualify ing Run is Tuesday, May 7. A West Coast run is May 16. Do a few CW contests, sharpen up that #2 pencil, and - are you QRV?

VE testing May 4

The next RARC sponsored VE testing will be Saturday, May 4.

Those wishing to test must contact Roger Reader, KA9BKK, 608 783 0723 or *readers@centurytel.net*, to register five days in advance. No walk ins.

The required ARRL fee remains $15.

The session will begin at 9 a.m. at the Ameri can Red Cross office, 2927 Losey Blvd. S., La Crosse.

Calendar

Sat. May 4

- VE testing, 9 a.m., Red Cross, 2927 Losey Blvd. S., La Crosse. Those wishing to test must contact Roger Reader, KA9BKK, 608 783 0723 or *readers@centurytel.net*. No walk ins.
- 8 a.m., Ozaukee Radio Club Hamfest, Circle-B Recreation Center, 6261 State Hwy 60, Cedarburg. Arrowhead Radio Amateur Club Hamfest, 9 a.m. to 2 p.m., Head of the Lakes Fairgrounds, 4700 S. Tower Ave. Highway 35 , Superior.

Sun. May 5

- Wisconsin Antique Radio Club free, 8 to 11 a.m. The Terminal, 5917 S. Howell Ave., Milwaukee.

Tue. May 7

- 7 p.m., Riverland Amateur Radio Club meeting, Gundersen/Lutheran.

Fri-Sun. May 17-19

- Hamvention, Dayton, Ohio

Thur. May 30

- Milwaukee Radio Amateur Club Auction, 8 p.m., Redemption Lutheran Church, 4057 N. Mayfair Rd., Milwaukee.

Sat-Sun. June 22-23

- ARRL Field Day, W7755 A. Johnson Rd., Holmen.

President's Frequency Modulation

By Greg Miller, KA9FOZ

How does everyone like this Wisconsin weather? I am getting tired of cold, rain and snow, but it is Wisconsin. As I write this it is mid April, 30 degrees and snowing. I hope that by the time you read this it is sunny and 60 plus degrees.

One thing this weather has done is get me behind the mic a little more. I met a very nice gentleman from South Carolina and had a very enjoyable QSO with him. That's what I like about this hobby. You get on the radio, call CQ and you might just strike up a friendship for years to come. I also listened to some of the contests going on and I jumped in just to help out some ones log book. From there I usually jump between bands to see which ones are open.

I am not a contester and the closest I get to being one is operating a little at Field Day. I enjoy Field Day because there is a lot happening than just operating. From setup to tear down there is a lot of activity, people to visit with, food to eat and drinks to enjoy. Some even camp through the weekend. Everything is well organized, but the one thing we can not control is the Wisconsin Weather. I am sure we will not see snow on that weekend. If we do, I give up.

Operating tip

Adding a footstool under your operating desk can help circulation and avoid "sore spots" by lifting your legs above the chair cushion from time to time. It doesn't have to be fancy - even a shallow cardboard box turned upside down will work fine. An adjust-able-height chair is also a great way to reduce operator fatigue.

Riverland Amateur Radio Club
P.O. Box 621
Onalaska, Wis. 54650

President ..... Greg Miller, KA9FOZ
Vice president..... Van Elston, WA9FIO
Treasurer..... Tom O'Brien, WB9BJQ
Secretary..... Carl Thurston, KC9HDS
Newsletter editor.. Bob Seaquist, KC9IWE

Address correspondence regarding the club to Tom O'Brien, WB9BJQ, *wb9bjq@charter.net*

This newsletter is sent by e mail to current and past RARC members and others. If you wish to change your address or sub scription, e mail *KC9IWE@arrl.net*

SIMCOMM 13 set for May 16

Wisconsin Emergency Management's annual SIMCOMM is set for 1:45 p.m Thursday, May 16.

The event is a one day exercise that has participation of many full time agencies. All ARES groups are invited.

Expect traffic on 7270 or 3967 as state ARES RACES groups practice traffic handling in the simulation.

According to Chief Radio Officer Skip Sharpe, W9REL, participation in events and exercises like the military amateur radio cross band test and SIMCOMM helps sharpen skills when called upon to provide communications in an emergency incident.

Lightning protection season upon us

It's the season when we need to be especially concerned about protecting our equipment from lightning damage. Here are some good articles on this important issue:

www.arrl.org/lightning protection
www.nr6ca.org/lightning.html
www.bwcelectronics.com/articles/WP30A190.pdf

SPECIAL SERVICE CLUB

Tech note

Simple and cheap radio interface

by Van Elston, WA9FIO

The digital modes available to Hams offer interesting, very efficient communication even with a hand-held. Trying it is simple: find one or more of the many software downloads available for your computer and hook it to your HT. It works best with an interface. Here is the WA9FIO design for the simplest and cheapest radio interface for your computer.

You can do CW, FSK, PSK, MFSK, HELL, Throb, Olivia, SSTV, JT 65, and Packet.

Build the interface inside a DB9 shell. The HT used the Audio PTT+TX connection and the mobile radio used the separate PTT line. I actually use a 10 db attenuator between the sound card output and the radio input. I built that into the 1/8 inch plug itself. No need to use isolation transformers, IC's, opto-isolators etc. That stuff is not needed. The important item is that only one ground line goes between the radio and the PC.

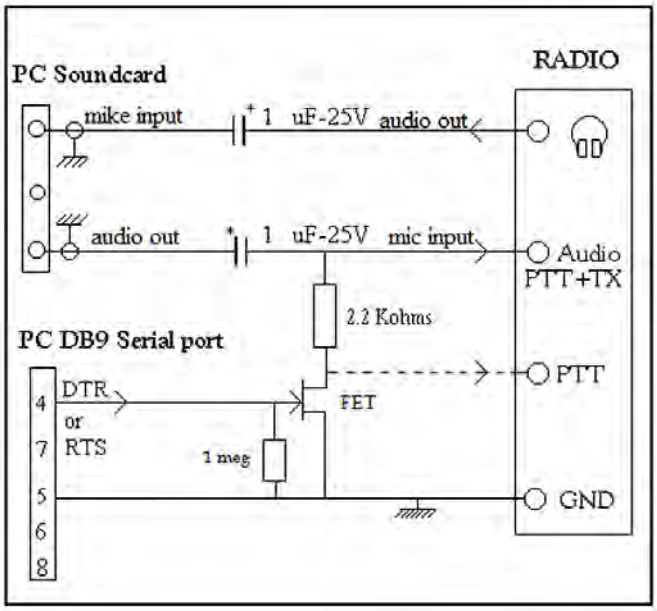

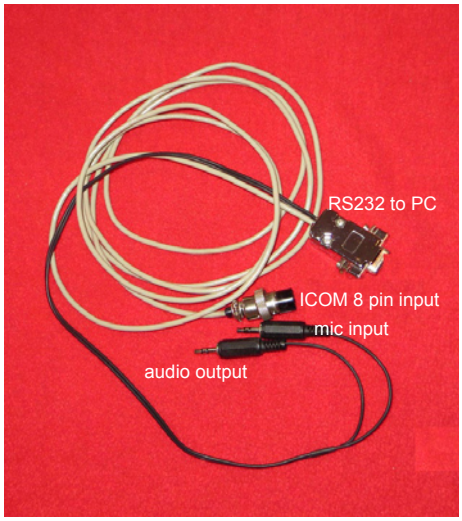

The Silence of the Hams

By Carl Thurston, KC9HDS

I guess that I'm as much at fault as anyone. I'm seldom on the air, rarely check into the net, and have yet to complete the VE open book test. Up until now I felt that I've had as good a series of excuses as any other Ham. My work has kept me so busy that I seldom had much left at the end of the day. That one is gone now as now I am retired.

As of last Sunday I've started to check into the net. The VE book is on my night stand now, so it shouldn't be too much longer and I'll have taken care of that as well. That just leaves my getting on HF on a regular basis. I can do this, sort of, my two main antennas: a Butternut vertical and a "Mystery Antenna" dipole are both in need of repair. I wish that I could say that their condition is due to the harsh winter, but the truth is they have been that way since before last fall. That leaves my trusty OPEK HVT 400. It works best on 15 meters, so that is what it is set at. It resides on top of my heat pump and when 15 is lively, I can work most of the country and much of Europe.

So you see, with the forbearance of the ever present Gremlins, I should be heard more often. Now My excuses have been put to rest, so what are yours? I have been cruising up and down on 15 meters and have not heard much from any local Hams, in fact I haven't heard anything. According to the information available from the ARRL web site, there are about 250 Hams in La Crosse county, so why are they quiet? Perhaps none of them use 15 meters. Until I get my antennas back into usable shape, I won't be able to be sure about the silence that I hear. So I guess that they have an excuse yet.

Meanwhile, I can't but wonder why there aren't more Hams active in any of the local clubs. We are very fortunate here in this area. We have two very good clubs that are as active as they can be with limited membership. I'm not going to compare or contrast these two groups as that wouldn't be fair because there philosophies and goals are vastly different. There is no right or wrong group, they both have devoted and hard working active members. They both are devoted to the hobby. They are both open to new members and strive continually encourage the attendance of anyone interested in Amateur Radio. So with all of that effort, why is it that both groups are suffering from dwindling membership?

There are as many reasons for this as there are Hams in the area. Everyone seems to have a good reason why they do not actively participate in one of these fine clubs. There are some who have been members of one or the other of these clubs in the past, but who have left because of some slight that took place some time in the past. It was often like the straw that broke the camel's back, the thing that made them leave. The reason itself may have been important to those Hams at the time, but probably have lost their relevance over time, yet they persist to remain away as it may hurt too much to admit that the reason for their leaving no longer matters.

That is all well and good but it still doesn't explain the on going silence of the Hams. If you can't join up, at least lets talk about it. Amateur Radio is for communication, so lets do.

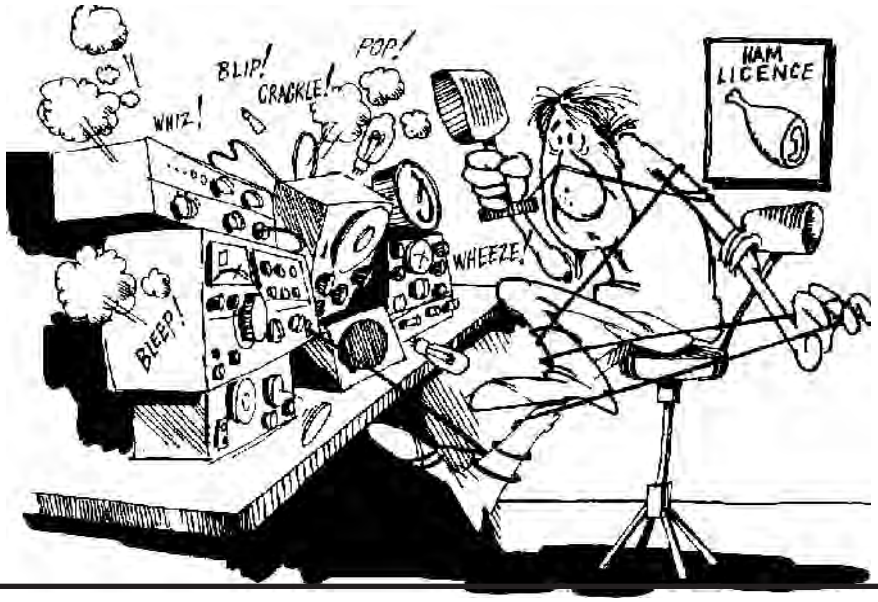

Backup strategies for the data paranoid

By Larry Gauthier, K8UT

Very few hams are still using paper logs. The computer has become an es sential peripheral in the ham shack. I abandoned paper logs 13 years ago and since then have captured 40,000+ QSOs on a PC's hard drive. As you might expect, during those years I've replaced the computer a few times and suffered a few hard drive crashes. Fortunately knock on wood I've never lost any data nor had to manually rebuild a log file. But, I've been lucky and I know it. I needed a better backup mechanism that works automatically and stores essential files in more than one location.

My goal in designing a backup system covers worst case scenarios that span a range of misfortunes. What if my: hard disk crashes; the lights blink; the base ment floods; the house burns down?

The resulting backup solution involves a combination of hardware and software. On the hardware side, I equipped each PC in my house with a secondary hard disk and a USB thumb drive. Each PC connects to a router and through it to a Linux Ubuntu computer that functions as a web host and file server. All of those computers are networked together with a router that provides upstream Internet connectivity. On the software side, the computers are running four programs that provide varying degrees of backup capability: Microsoft Windows, Acro nis True Image Home, 2BrightSparks' SyncBack, and a utility program I wrote called TRNmirror.

Backup Within each Computer

Each computer performs a local backup from its primary to its secondary disk. The built in Windows backup util ity runs monthly to create a full image of the primary disk on the secondary disk, while True Image Home runs twice a week to create incremental backups of the hard disk. Aside from whole-disk copies, scheduled SyncBack profiles run nightly snapshots of essential files - like My Documents, all ham radio programs, and all logs files - from the primary to the secondary disk and to the USB thumb drive. These operations hap pen automatically without any human intervention.

Backup to the File Server

Included in each computer's Syncback schedules are profiles that run nightly and transfer files between the com puters' secondary hard disks and the Ubuntu server. For added data insur ance, Syncback's profiles are configured with VERSIONING = ON, which

examines files for changes and renames an existing backup file with a version number (myfile(001), myfile(002), my file(003)...) before copying the current file from the PC. This technique creates generations of backup files in the event that I need to restore a version from the distant past. These operations are also automatic and require no intervention from me.

Backup to an Internet Service

My "Beginner Web Hosting Account" at www.1and1.com includes 250 GB of storage space, which serves as an off-site repository for my "if the house burns down" scenario. Nightly Syncback pro files connect from the PCs to 1and1.com and use the FTP protocol to copy files up into the cloud. In addition to ham radio files, I also copy other files - things like the family photo album, legal and accounting documents and important correspondence. Like the previous back ups, this one is also automatic.

Real-Time File Copying

In addition to the previous traditional instances of static backups, there are also special times like when I am running a contest that I want the added secu rity of instantaneous file backups. The elegant solution to this problem would be an expensive RAID disk array; my in elegant solution is a utility program that I wrote myself. TRNmirror.exe moni tors a given disk directory and detects when a file's size or date-stamp changes, at which time it makes a copy with versioning) of the log in a second loca tion. If my logging software were to fail, the logfile were to become corrupted, the hard disk were to crash, or the PC's power supply were to go up in smoke, I would still have a copy of that 1000 QSO contest log file in another location. If you're interested, that log-copying util ity is available from my web site.

Alternatives

The architecture and techniques described in this article work fine for me, but may not fit in your environ ment. Feel free to make substitutions. Maybe your version of Windows lacks a backup/restore program? Perhaps you only have one computer in the house, you don't have an Ubuntu server, or your computers are not networked together? No secondary hard drives? Thumb drives are cheap! Or burn the files to a DVD! No Internet connection? Snail mail a CD/DVD to a local ham for safe-keep ing. The important thing is that your long term investments in this hobby are safeguarded.

References

Monthly full image backup - Micro soft Windows 7 Incremental backups Acronis True Image Home, *www.acronis.com* Nightly snapshots 2Bright Sparks SyncBack, *www.2brightsparks.com* Off-site backup - 1and1, www.1and1.com Real time copy K8UT TRNmirror.exe, *www.k8ut.com*

Rules

Log "QSO's" from Tuesday, May 7, through Nov. 30
Turn in logs at RARC meeting, Tuesday, Dec. 3
QSO's may be over the air or in an eyeball QSO
Awards will be presented at the club's holiday party
QSO's may be on the club's 146.97 PL 131.8 repeater.
The club's Sunday Night Net will provide QSO opportunities.

RARC 2013 Worked All Club Members Log

Your name and Call sign:

	Date	Time	Frequency
KC9BDL			
WB9BJQ			
KA9BKK			
NF9E			
W9EOA			
KB9EWG			
WA9FIO			
KA9FOX			
KA9FOZ			
KC9HDP			
KC9HDS			
KC9IWE			
W0JDC			
N9LK			
KB9OFK			
N9RWU			
KC9RXI			
AB9TS			
N9UEZ			
W9UP			
N9WNX			
KE9XQ			